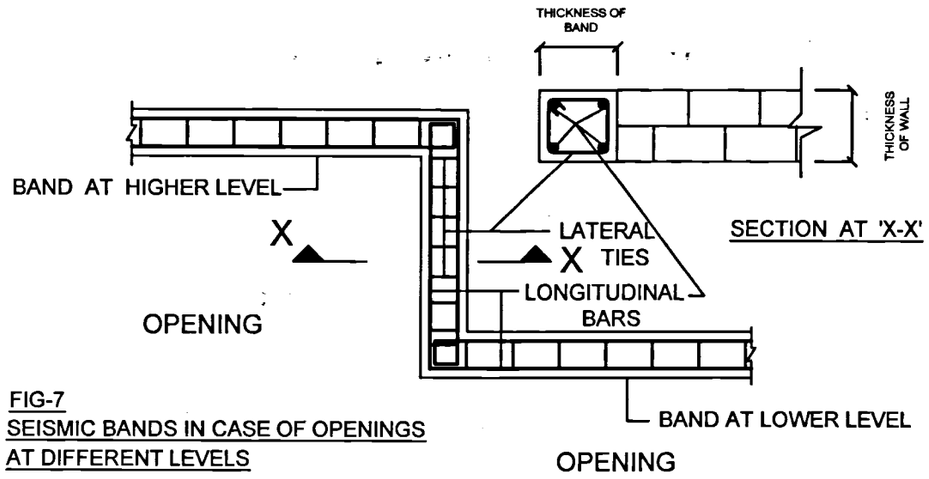

FIG-7
SEISMIC BANDS IN CASE OF OPENINGS AT DIFFERENT LEVELS

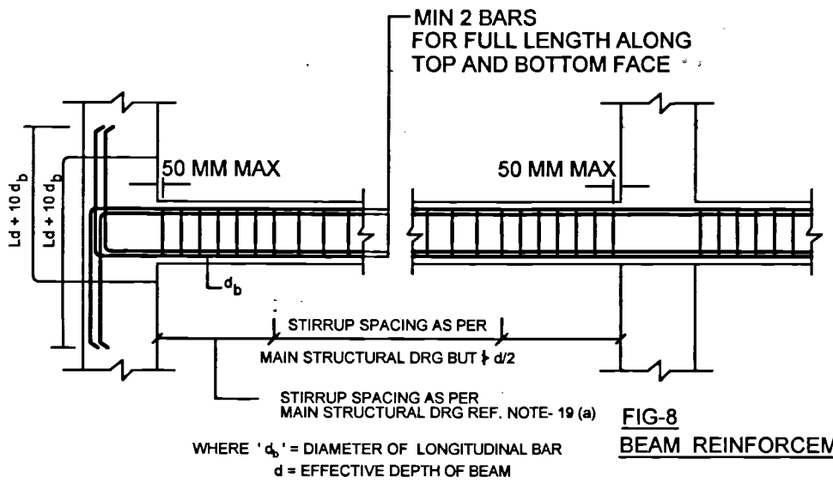

FIG-8
BEAM REINFORCEMENT

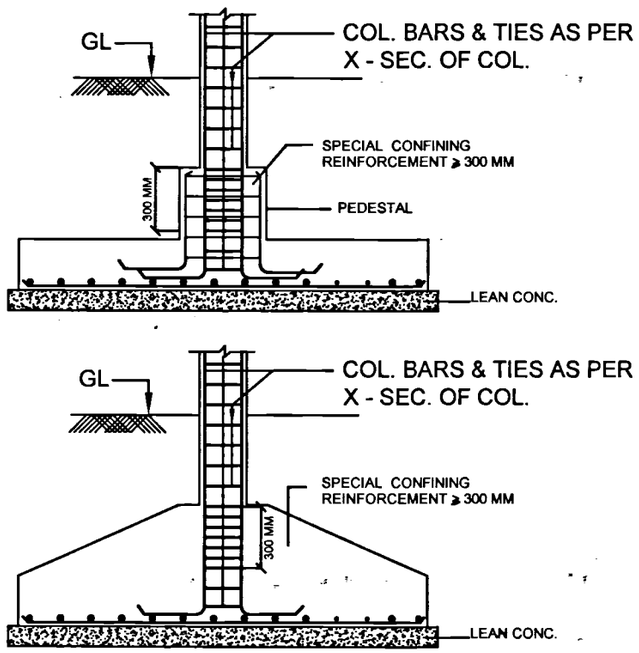

FIG-10
PROVISION OF SPECIAL CONFINING REINFORCEMENT IN FOOTING

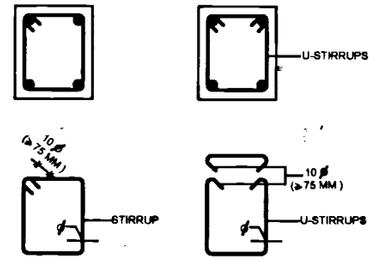

FIG-8 (A)
BENDING DETAILS OF STIRRUPS IN BEAMS

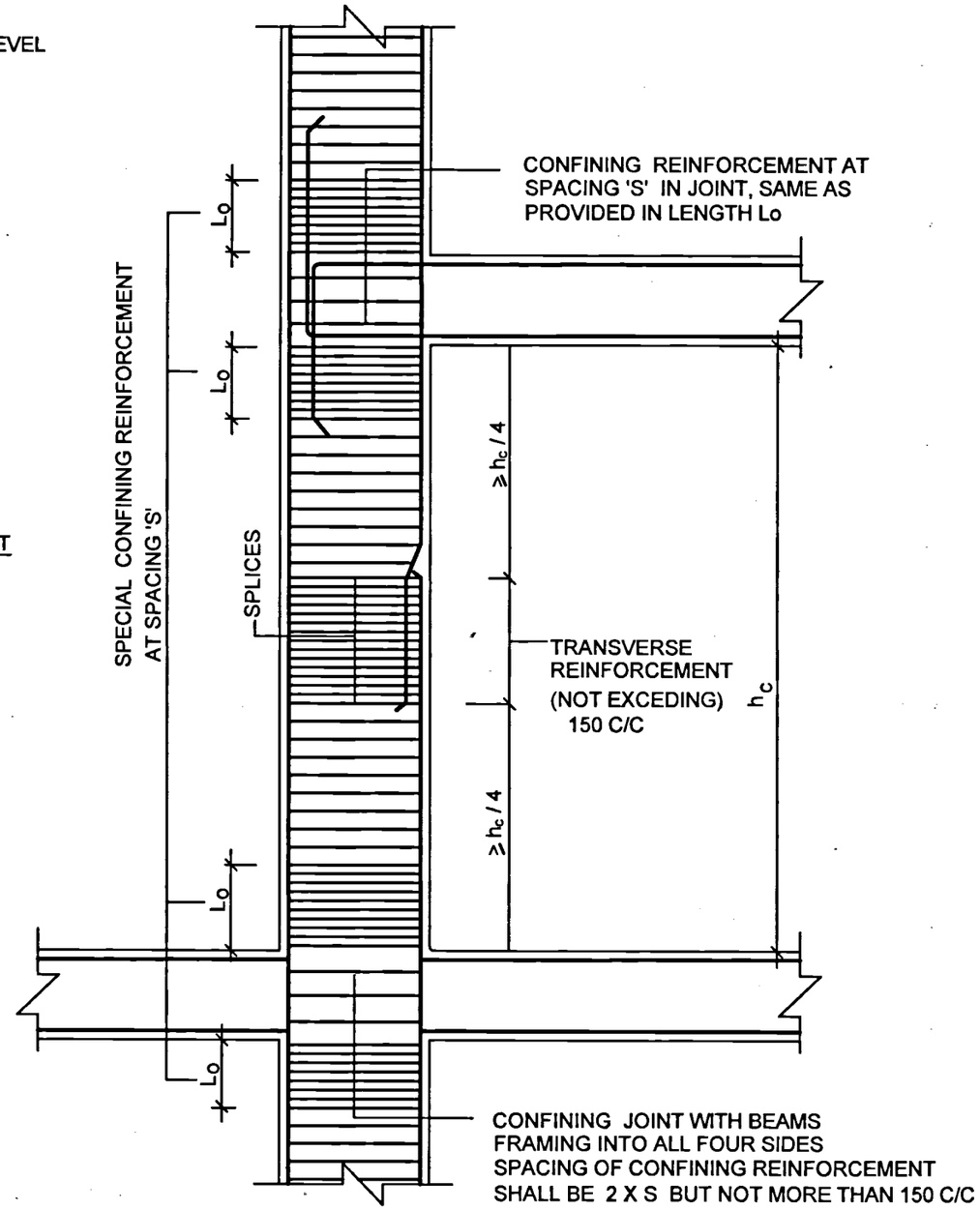

FIG-9
COLUMN AND JOINT DETAILING

S NO	DATE	DESCRIPTION	INITIAL
REVISION			

TYPICAL DETAILS OF SEISMIC PROVISIONS

FIG-7, FIG-8, FIG-8(A) FIG-9 AND FIG - 10

DATE	01.04.2021	CHIEF ENGINEER UDHAMPUR ZONE	SH NO 5/5
DRN	SUB A. SHABEER		
DES	LT COL UDIT NEGI		
DF NO			
SCALE	AS SHOWN	DRG NO :CEUZ/TD-1584/2021	

SO-1 (DESIGN)
FOR CHEF ENGINEER

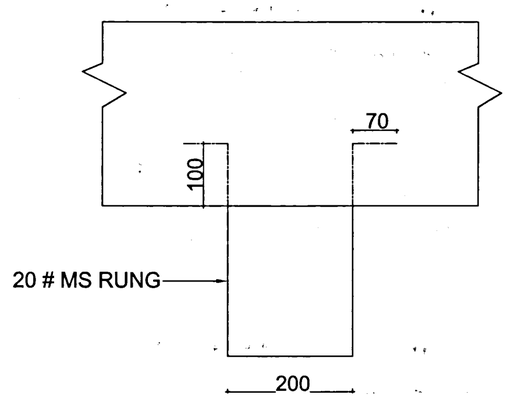

DETAIL OF MS RUNG

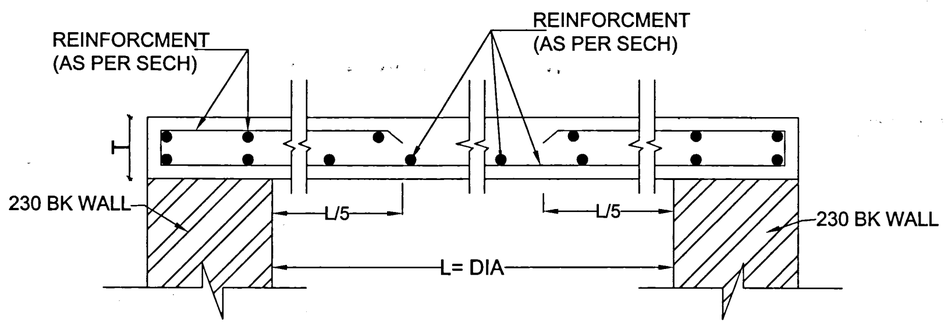

TYPICAL DETAIL OF RCC SLAB

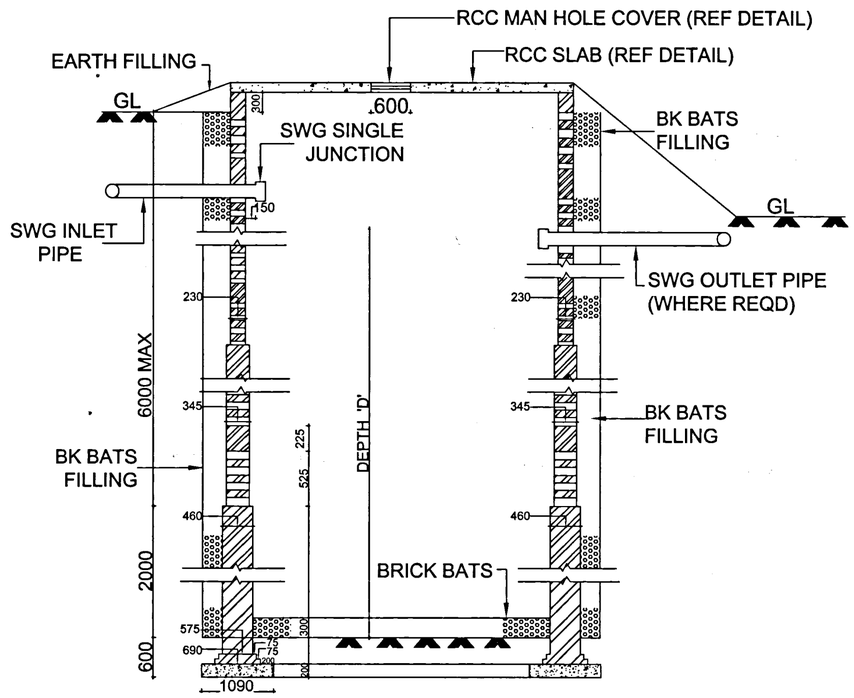

SECTION AT 'B-B'

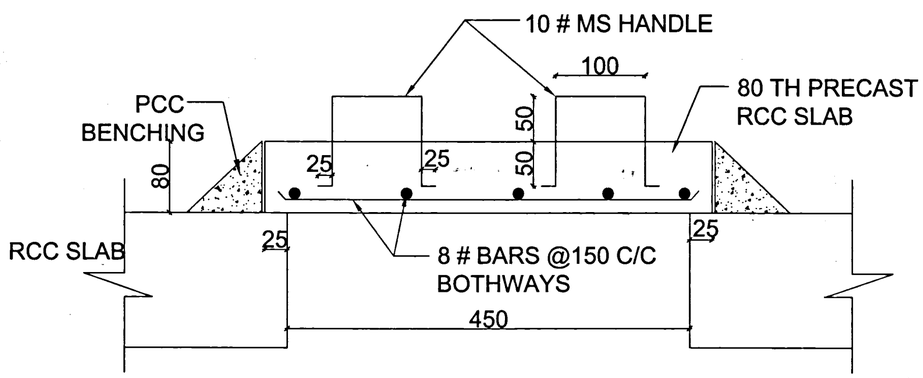

DETAIL OF MANHOLE COVER (SIZE OF MANHOLE 450X600)

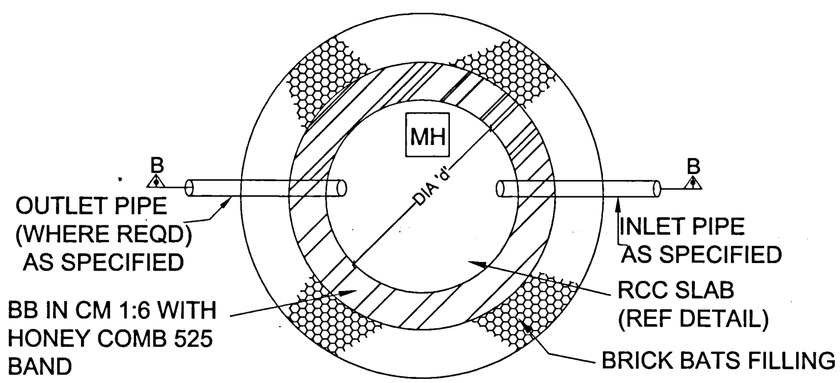

PLAN OF SOAKAGE WELL

NOTES

23. BASE OF SOAKAGE WELL SHALL BE ABOVE GROUND WATER TABLE LEVEL.
24. INVERT OF OUTLET PIPE OF SEPTIC TANK SHALL BE 50 MM BELOW INVERT OF INLET PIPE.
25. FOR POPULATION OVER 100, DUPLICATING SEPTIC TANKS,EACH PROVIDING HALF THE TOTAL CAPACITY REQUIRED, SHOULD BE OPERATED IN PARALLEL.
26. MINIMUM FREE-BOARD OF 300 MM SHALL BE PROVIDED IN SEPTIC TANK.
27. VENTILATING PIPE (MINIMUM 50 MM DIA) WITH SUITABLE CAGE OF MOSQUITO PROOF MESH AT THE TOP SHALL BE PROVIDED WITH EVERY SEPTIC TANK.

NOTES

1. CONTRACTOR TO CHECK AND VERIFY ALL DIMENSIONS BEFORE EXECUTION OF THE WORK.
2. FIGURED DIMENSIONS SHALL BE FOLLOWED.
3. ALL DIMENSIONS ARE GIVEN IN MILLIMETRES UNLESS OTHER WISE SHOWN.
4. CRUSHING STRENGTH OF BRICKS SHALL BE MINIMUMM 70KG/CM^2.
5. SLAB THICKNESS WITH SOIL FILLING UP TO 500MM SHALL BE INCREASED BY 2CM PER 10CM OR PART THERE OF EARTH FILLING SUJECT TO MAX^M THICKNESS AS GIVEN IN SCHEDULE.
6. IN CASE OF MASONRY WALLS BUILT IN STONE THE THICKNESS BE AS GIVEN IN BRACKETS IN SECTION OF WALLS.
7. THIS DRAWING IS BASED ON DETENTION PERIOD OF 24HOURS AND DESLUDGING PERIOD OF TWO YEARS AND DESIGN GENERALLY ADOPTED FROM IS.2470 (AS AMENDED) 1985.
8. BEFORE COMMISSIONING THE SEPTIC TANK WILL BE FILLED WITH WATER OUTLET LEVEL. SEPTIC TANK SHOULD PRERERABLY BY SEEDED WITH WELL DIGESTED SLUDGE FROM OTHER SEPTIC TANK OR SLUDGE DIGESTION TANK SMALL QUANTITIES OF DECAYING ORGANIC MATTER SUCH AS DIGESTED COWDUNG MAY BE INTRODUCED IN CASE DIGESTED SLUDGE IS NOT AVAILBLE.
9. SLOPE IN THE BED OF SEPTIC TANKWILL BE 1:10 OR AS SHOWN IN THE PLAN ,SECTIONAL ELEVATION SHALL BE AS UNDER:-
   (i) FOR SEPTIC TANK UP TO 50 USERS =5CM.
   (ii) FOR SEPTIC TANK 100TO 500 USERS =10CM.
10. RCC MANHOLE SHAFT SHALL BE PROVIDED TO SEPTIC TANKS ONLY WHERE THE SEPTIC TANKS ARE BURRIED UNDER GROUND IN OTHER CASES MANHOLE AND FRAMES ONLY SHALL BE KEPT 100 ABOVE GL / EARTH FILLING.
11. BENCHING IN INLET CHAMBER SHALL BE PCC 1:2:4 LAID TO 1:1 SLOPE .
12. CONNECTING PIPE FROM S.T OUTLET CHAMBER SHALL BE SWG PIPE 150 Ø .
13. THE SOIL ABSORPTION SYSTEM SHOULD NOT BE COLSER THAN 18M TO ANY SOURCE OF DRINKING WATER AND NOT CLOSER THAN 6M. FROM ANY HABITABLE BUILDING.
14. BRICK WORK IN SOAKAGE WELL (OF ANY DIAMETER) BE BUILT LIKE BRICK WORK STRAIGHT ON PLAN OR TD CURYE EXCEEDING 6M. MEAN RADIUS AND NEED NOT BE IN HEADER COURSES WITH BRICK CUT TO THE RADIO.
15. SOAKAGE TEST AS GIVEN IN IS 2470.1985 WILL BE CARRIED OUT AND SIZE PROVIDED FROM THE TABLE ASCERTAINING THE PERCOLATION RATE IN MINUTES.
16. BRIEF SPECIFICATION:-

(a) SEPTIC TANK	
(i) FOUNDATION AND FLOOR	PCC 1:2:4 OVER HARD
(ii) BRICK WORK	CORE CEMENT MORTOR 1:4
(iii) PCC AND RCC WORK	1:2:4 MIX
(iv) FINISHES:-	
(i) FLOOR	20MM WATER PROOF CEMENT PLASTER IN 1:3
(ii) INTERNAL SURFACE OF WALL	-DO-
(iii) EXT. SURFACE OF WALLS	FLUSH POINTED AS WORK WORK PROCEEDS
(V) SOAKAGE WELL	
(i) FOUNDATION	PCC 1:4:8
(ii) WALLS	CM 1:6 HONEY COMBED
(iii) ROOF	RCC 1:2:4

17. FOR DETAIL OF MANHOLE REF.DRG NO .CE/TD.805/87SHTNO $^2/_2$.
18. DT IS NOT RECOMMENDED IN AREAS WHERE FIBROUS DOORS OF TREES OR VEGITATION ARE LIKELY TO GENETRATE THE SYSTEM AND CAUSE BLOCK AGE IN SUCH CASE THE DESIGN OF DTs SHALL BE CARRIED OUT BY E2(DESIGN) SECTION.
19. IN ALL RCC WORK M-25 GDE DESIGN MIX CONCRETE AS PER IS.456 OF 2000 SHALL BE USED.
20. ALL STEEL USED SHALL BE HYSD FE 500 CONFORMING TD IS -1786.
21. CONFIRMATION WITH RESPECT TO REQUIRED SIZE OF SEPTIC TANK AND SOAKAGE WELL SHALL BE TAKEN FROM E2 (DESIGN) SECTION DURING PLANNING STAGE OF WORK.
22. FOR INTERMEDIATE/UNAVILABLE SIZES OF SEPTIC TANK AND SOAKAGE WELL,NEXT HIGHER AVAILABLE SIZE SHALL BE INCORPORATED.

SL NO	DATE	DESCRIPTION	INITIAL

REVISION

TYPICAL DETAIL OF SOAKAGE WELL PIT & SEPTIC TANK (UP TO 300 USERS)

DATE	23-04-21	CHIEF ENGINEER UDHAMPUR ZONE	SHT NO. 1/4
DRN	NK VIJAY BHATT		
DES	LT COL UDIT NEGI		
CKD			
SCALE	NTS	CEUZ/TD-1585/2021	

UDIT NEGI
LT COL
SOI (DESIGN)

TABLE SHOWING SIZE OF SOAKAGE WELL

SIZE RECOMMBDED DIA 'd' (METRES)X DEPTHE 'D' (METRES)

NO OF USERS	PRICOLATION RATE								REMARKS
	1	2	3	4	5	10	15	30	
5	1.00 X 1.30	1.00 X 1.90	1.00 X 2.30	1.00 X 2.60	1.00 X 3.00	1.50 X 2.70	1.50 X 3.40	2.00 X 3.60	
10	1.00 X 2.60	1.20 X 3.10	1.50 X 3.00	1.50 X 3.50	1.80 X 3.30	2.00 X 4.10	2.20 X 4.60	2.80 X 5.10	
15	1.50 X 2.60	1.80 X 3.10	2.20 X 3.10	2.20 X 3.50	2.50 X 3.50	3.00 X 4.10	3.00 X 5.10	3.60 X 6.00	
20	1.80 X 2.90	2.20 X 3.40	2.50 X 3.60	2.80 X 3.70	2.80 X 4.20	3.20 X 5.10	3.40 X 6.00	4.10 X 7.00	
FOR MARRIED ACCOMMODATION AND ANY OTHER LIVING ACCOMODATION WITH KITCHEN									
50	3.00 X 4.30	3.20 X 5.80	3.70 X 6.00	4.00 X 6.50	4.20 X 7.00	5.00 X 8.10	-	-	
100	4.00 X 6.50	5.00 X 7.40	5.00 X 8.90	-	-	-	-	-	
150	5.00 X 7.70	-	-	-	-	-	-	-	
200	-	-	-	-	-	-	-	-	
300	-	-	-	-	-	-	-	-	
FOR OTHER ACCOMMODATION (EXCEPT OFFICE AND SCHOOLS)									
50	2.80 X 4.00	3.00 X 5.20	3.50 X 5.40	3.80 X 5.80	4.20 X 5.90	5.00 X 6.90	5.00 X 8.60	-	
100	3.80 X 5.80	4.80 X 6.50	5.00 X 7.60	5.00 X 8.80	-	-	-	-	
150	5.00 X 6.60	-	-	-	-	-	-	-	
200	5.00 X 8.80	-	-	-	-	-	-	-	
300	-	-	-	-	-	-	-	-	
FOR OFFICE ACCOMMODATION AND SCHOOLS WITHOUT HOSTEL									
50	1.80 X 2.90	2.20 X 3.40	2.50 X 3.60	2.80 X 3.70	2.80 X 4.20	3.20 X 5.10	3.40 X 6.00	4.10 X 7.00	
100	1.80 X 2.90	2.20 X 3.40	2.50 X 3.60	2.80 X 3.70	2.80 X 4.20	3.20 X 5.10	3.40 X 6.00	4.10 X 7.00	
150	2.80 X 4.00	3.00 X 5.20	3.50 X 5.40	3.80 X 5.80	4.20 X 5.90	5.00 X 6.90	5.00 X 8.60	-	
200	2.80 X 4.00	3.00 X 5.20	3.50 X 5.40	3.80 X 5.80	4.20 X 5.90	5.00 X 6.90	5.00 X 8.60	-	
300	3.80 X 5.80	4.80 X 6.50	5.00 X 7.60	5.00 X 8.80	-	-	-	-	

SCHEDULE OF SOAKAGE WELLS

SER NO.	DIA OF WELL (IN METRE)	THICKNESS OF SLAB (T) IN MM	REINFORCMENT
1.	UP TO 2.40	100	10 # @ 180 C/C BOTH WAYS (ALT BENT-UP)
2.	UP TO 3.60	110	10 # @ 150 C/C BOTH WAYS (ALT BENT-UP)
3.	UP TO 4.00	120	-DO-
4.	UP TO 5.00	130	10 # @ 100 C/C BOTH WAYS (ALT BENT-UP)

REFERENCE TO DRAWINGS

SL NO	DRG. NO.	SHT. NO.	DESCRIPTION
TYPICAL DETAILS DRAWINGS			
1.	CEUZ/TD - 1187/2002	1/1	DETAILS OF INTERNAL PLASTER GROOVES AND EXTERNAL PLASTER DETAILS AT JUNCTION OF WALL/BEAM/COLUMN
2.	CEUZ/TD - 1251/2007	1/1	TYPICAL RCC DETAILS.
3.	CEUZ/TD - 1252/2007	1/11 TO 11/11	GENERAL NOTES FOR RCC WORKS.
4.	CEUZ/TD - 1584/2021	1/5 TO 5/5	TYPICAL DETAILS OF SEISMIC PROVISIONS.

SL NO	DATE	DESCRIPTION	INITIAL
REVISION			

TYPICAL DETAIL OF SOAKAGE WELL & SEPTIC TANK (UP TO 300 USERS)

DATE	23-04-21	CHIEF ENGINEER UDHAMPUR ZONE	SHT NO. 2/4
DRN	NK VIJAY BHATT		
DES	LT COL UDIT NEGI		
CKD			
SCALE	NTS	CEUZ/TD-1585/2021	

UDIT NEGI
LT COL
SOI (DESIGN)

SCHEDULE / STRUCTURAL DETAIL OF SEPTIC TANK

SER. No.	No. OF USER (UP TO)	LENGTH (L) IN METERS	BREADTH (B) IN METERS	LIQUID DEPTH (D) IN METERS	EARTH FILLING DEPTH: ZERO			500 (UP TO)			1000 (UP TO)			1500 (UP TO)			2000 (UP TO)			SCHEDULE OF BAFFLE WALL REINFORCEMENT			REMARKS
					THICKNESS OF SLAB (T)	MAIN BARS ALT CKD	DISTRIBUTION BARS	THICKNESS OF SLAB	MAIN BARS ALT CKD	DISTRIBUTION BARS	THICKNESS OF SLAB	MAIN BARS ALT CKD	DISTRIBUTION BARS	THICKNESS OF SLAB	MAIN BARS ALT CKD	DISTRIBUTION BARS	THICKNESS OF SLAB	MAIN BARS ALT CKD	DISTRIBUTION BARS	THICKNESS OF SLAB	MAIN BARS ALT CKD	DISTRIBUTION BARS	
FOR 20 USERS																							
1.	05	1.50	0.75	1.05	100	8 # @ 220 C/C	8 # @ 320 C/C	100	8 # @ 180C/C	8 # @ 320 C/C	100	8 # @ 90 C/C	8 # @ 300 C/C	120	12 # @ 150 C/C	8 # @ 300 C/C	130	12 # @ 120 C/C	8 # @ 280 C/C	80	10 # @ 150 C/C	8 # @ 180 C/C	SINGLE CHAMBER
2.	10	2.00	0.90	1.40	100	8 # @ 220 C/C	8 # @ 320 C/C	100	8 # @ 180 C/C	8 # @ 320 C/C	100	8 # @ 90 C/C	8 # @ 300 C/C	120	12 # @ 150 C/C	8 # @ 300 C/C	130	12 # @ 120 C/C	8 # @ 280 C/C	80	10 # @ 150 C/C	8 # @ 180 C/C	DOUBLE CHAMBER
3.	15	2.00	0.90	2.00	100	8# @ 220 C/C	8 # @ 320 C/C	100	8 # @ 180 C/C	8 # @ 320 C/C	100	8 # @ 90 C/C	8 # @ 300 C/C	120	12 # @ 150 C/C	8 # @ 300 C/C	130	12 # @ 120 C/C	8 # @ 280 C/C	80	10 # @ 150 C/C	8 # @ 180 C/C	DOUBLE CHAMBER
4.	20	2.30	1.10	1.80	100	8 # @ 220 C/C	8 # @ 320 C/C	100	8 # @ 180C/C	8 # @ 320 C/C	100	8 # @ 90 C/C	8 # @ 300 C/C	120	12 # @ 150 C/C	8 # @ 300 C/C	130	12 # @ 120 C/C	8 # @ 280 C/C	80	10 # @ 150 C/C	8 # @ 180 C/C	DOUBLE CHAMBER
FOR MARRIED ACCOMMODATION AND ANY OTHER LIVING ACCOMODATION WITH KITCHEN																							
5.	50	5.00	2.00	1.24	100	8 # @ 220 C/C	8 # @ 320 C/C	100	8 # @ 180 C/C	8 # @ 320 C/C	100	8 # @ 90 C/C	8 # @ 300 C/C	120	12 # @ 150 C/C	8 # @ 300 C/C	130	12 # @ 120 C/C	8 # @ 280 C/C	80	10 # @ 150 C/C	8 # @ 180 C/C	DOUBLE CHAMBER
6.	100	7.50	2.65	1.24	100	8 # @ 220 C/C	8 # @ 320 C/C	100	8 # @ 180 C/C	8 # @ 320 C/C	100	8 # @ 90 C/C	8 # @ 300 C/C	120	12 # @ 150 C/C	8 # @ 300 C/C	130	12 # @ 120 C/C	8 # @ 280 C/C	80	10 # @ 150 C/C	8 # @ 180 C/C	DOUBLE CHAMBER
7.	150	10.00	3.00	1.24	100	8 # @ 220 C/C	8 # @ 320 C/C	100	8 # @ 180 C/C	8 # @ 320 C/C	100	8 # @ 90 C/C	8 # @ 300 C/C	120	12 # @ 150 C/C	8 # @ 300 C/C	130	12 # @ 120 C/C	8 # @ 280 C/C	80	10 # @ 150 C/C	8 # @ 180 C/C	DOUBLE CHAMBER
8.	200	12.00	3.30	1.24	100	8 # @ 220 C/C	8 # @ 320 C/C	120	8 # @ 120 C/C	8 # @ 300 C/C	140	12 # @ 110 C/C	8 # @ 300 C/C	150	12 # @ 110 C/C	8 # @ 240 C/C	180	12 # @ 100 C/C	8 # @ 220 C/C	100	10 # @ 150 C/C	8 # @ 180 C/C	DOUBLE CHAMBER
9.	300	15.00	4.00	1.24	100	8 # @ 220 C/C	8 # @ 320 C/C	120	8 # @ 120 C/C	8 # @ 300 C/C	140	12 # @ 110 C/C	8 # @ 300 C/C	120	12 # @ 110 C/C	8 # @ 240 C/C	180	12 # @ 100 C/C	8 # @ 220 C/C	100	10 # @ 150 C/C	8 # @ 180 C/C	DOUBLE CHAMBER
FOR OTHER ACCOMMODATION (EXCEPT OFFICE AND SCHOOL)																							
10.	50	5.0	1.60	1.40	100	8 # @ 220 C/C	8 # @ 320 C/C	100	8 # @ 180 C/C	8 # @ 320 C/C	100	8 # @ 90 C/C	8 # @ 300 C/C	120	12 # @ 150 C/C	8 # @ 300 C/C	130	12 # @ 120 C/C	8 # @ 280 C/C	80	10 # @ 150 C/C	8 # @ 180 C/C	DOUBLE CHAMBER
11.	100	5.70	2.10	1.70	100	8 # @ 220 C/C	8 # @ 320 C/C	100	8 # @ 180 C/C	8 # @ 320 C/C	100	8 # @ 90 C/C	8 # @ 300 C/C	120	12 # @ 150 C/C	8 # @ 300 C/C	130	12 # @ 120 C/C	8 # @ 280 C/C	80	10 # @ 150 C/C	8 # @ 180 C/C	DOUBLE CHAMBER
12.	150	7.70	2.40	1.70	100	8 # @ 220 C/C	8 # @ 320 C/C	100	8 # @ 180 C/C	8 # @ 320 C/C	100	8 # @ 90 C/C	8 # @ 300 C/C	120	12 # @ 150 C/C	8 # @ 300 C/C	130	12 # @ 120 C/C	8 # @ 280 C/C	80	10 # @ 150 C/C	8 # @ 180 C/C	DOUBLE CHAMBER
13.	200	8.90	2.70	1.70	100	8 # @ 220 C/C	8 # @ 320 C/C	100	8 # @ 180 C/C	8 # @ 320 C/C	100	8 # @ 90 C/C	8 # @ 300 C/C	120	12 # @ 150 C/C	8 # @ 300 C/C	130	12 # @ 120 C/C	8 # @ 280 C/C	80	10 # @ 150 C/C	8 # @ 180 C/C	DOUBLE CHAMBER
14.	300	10.70	3.30	1.70	100	8 # @ 220 C/C	8 # @ 320 C/C	120	8 # @ 120 C/C	8 # @ 300 C/C	140	12 # @ 110 C/C	8 # @ 300 C/C	150	12 # @ 110 C/C	8 # @ 240 C/C	180	12 # @ 100 C/C	8 # @ 220 C/C	100	10 # @ 150 C/C	8 # @ 180 C/C	DOUBLE CHAMBER
FOR OFFICE ACCOMMODATION AND SCHOOL WITHOUT HOSTEL																							
15.	50	2.30	1.10	1.80	100	8 # @ 220 C/C	8 # @ 320 C/C	100	8 # @ 180C/C	8 # @ 320 C/C	100	8 # @ 90 C/C	8 # @ 300 C/C	120	12 # @ 150 C/C	8 # @ 300 C/C	130	12 # @ 120 C/C	8 # @ 280 C/C	80	10 # @ 150 C/C	8 # @ 180 C/C	DOUBLE CHAMBER
16.	100	2.30	1.10	1.80	100	8 # @ 220 C/C	8 # @ 320 C/C	100	8 # @ 180C/C	8 # @ 320 C/C	100	8 # @ 90 C/C	8 # @ 300 C/C	120	12 # @ 150 C/C	8 # @ 300 C/C	130	12 # @ 120 C/C	8 # @ 280 C/C	80	10 # @ 150 C/C	8 # @ 180 C/C	DOUBLE CHAMBER
17.	150	5.0	1.60	1.40	100	8 # @ 220 C/C	8 # @ 320 C/C	100	8 # @ 180 C/C	8 # @ 320 C/C	100	8 # @ 90 C/C	8 # @ 300 C/C	120	12 # @ 150 C/C	8 # @ 300 C/C	130	12 # @ 120 C/C	8 # @ 280 C/C	80	10 # @ 150 C/C	8 # @ 180 C/C	DOUBLE CHAMBER
18.	200	5.0	1.60	1.40	100	8 # @ 220 C/C	8 # @ 320 C/C	100	8 # @ 180 C/C	8 # @ 320 C/C	100	8 # @ 90 C/C	8 # @ 300 C/C	120	12 # @ 150 C/C	8 # @ 300 C/C	130	12 # @ 120 C/C	8 # @ 280 C/C	80	10 # @ 150 C/C	8 # @ 180 C/C	DOUBLE CHAMBER
19.	300	5.70	2.10	1.70	100	8 # @ 220 C/C	8 # @ 320 C/C	100	8 # @ 180 C/C	8 # @ 320 C/C	100	8 # @ 90 C/C	8 # @ 300 C/C	120	12 # @ 150 C/C	8 # @ 300 C/C	130	12 # @ 120 C/C	8 # @ 280 C/C	80	10 # @ 150 C/C	8 # @ 180 C/C	DOUBLE CHAMBER

REFERENCE TO DRAWINGS

SL NO	DRG. NO.	SHT. NO.	DESCRIPTION
TYPICAL DETAILS DRAWINGS			
1.	CEUZ/TD - 1187/2002	1/1	DETAILS OF INTERNAL PLASTER GROOVES AND EXTERNAL PLASTER DETAILS AT JUNCTION OF WALL/BEAM/COLUMN
2.	CEUZ/TD - 1251/2007	1/1	TYPICAL RCC DETAILS.
3.	CEUZ/TD - 1252/2007	1/11 TO 11/11	GENERAL NOTES FOR RCC WORKS.
4.	CEUZ/TD - 1584/2021	1/5 TO 5/5	TYPICAL DETAILS OF SEISMIC PROVISIONS.

SL NO	DATE	DESCRIPTION	INITIAL
REVISION			

TYPICAL DETAIL OF SOAKAGE WELL & SEPTIC TANK (UP TO 300 USERS)

DATE	23.04.21	CHIEF ENGINEER UDHAMPUR ZONE	SHT NO. 4/4
DRN	NK VIJAY BHATT		
DES	LT COL UDIT NEGI		
CKD			
SCALE	NTS	CEUZ/TD-1585/2021	

UDIT NEGI
LT COL
SOI (DESIGN)

Recd vide IDN No. 26669/71/SA-05/19-20/31/E-2 D dt. 23.04.21